手动葫芦系列
Manual hoist series

VE 手拉葫芦
VE HAND CHAIN HOIST

1. 加大吊钩适用更多工况，优质合金锻造，并经热处理，具有超载时不断裂的特点。

1. Larger hook for more working conditions, high-quality alloy forging, and heat treatment, with overload without breaking characteristics.

2. 采用锻造成型，外形美观。

2. Adopt forging forming, beautiful appearance.

3. 多点支撑结构，传动受力更合理。

3. multi-point supporting structure, driving force is more reasonable.

4. 特殊设计三角花键长轴机构，拆装方便。

4. Specially designed triangle spline long axis mechanism, easy to disassemble and assemble.

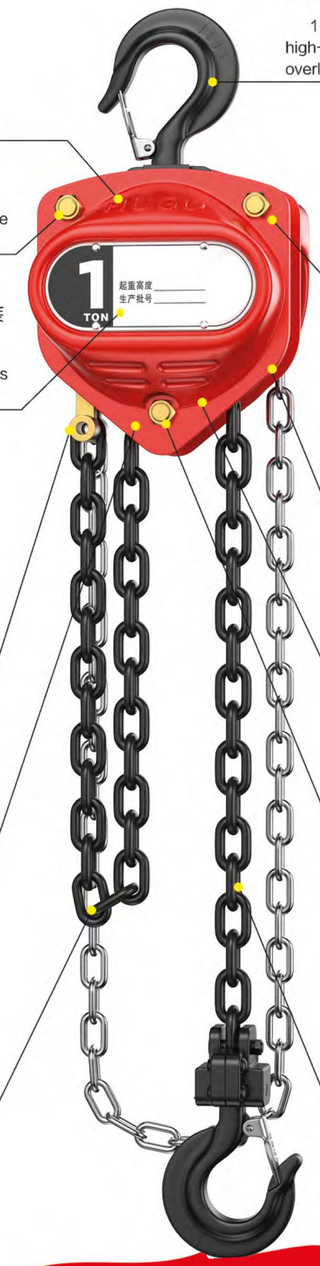

12. 加厚外罩，增加凸筋工艺，耐撞击，保护内部结构。

12.Thickened cover, increased ribbed process, impact resistance, protection of internal structure.

10. 罩壳卷边工艺，增加强度的同时，如手拉链斜拉，不卡链，无过大噪声。

10.Shell curling process, increase strength at the same time, such as hand zipper cable-stayed, not card chain, no excessive noise.

7. 转动齿轮低合金钢精密加工，经渗碳、热处理工艺，表面光洁、耐磨、防锈。

7. Low-alloy steel rotating gear precision processing, carburizing, heat treatment process, the surface is smooth, wear-resistant, rust-proof.

5. 采用上棘爪制动，安全系数提高两倍以上。

5.Use the upper pawl brake to increase the Factor of safety by more than twice.

8. 起重链轮采用优质合金钢，传动精准，强度高。

8. The hoisting sprocket adopts high-quality alloy steel, the transmission is accurate, the strength is high.

6. 整机防滑螺母，安全性更好。

6. The whole machine anti-skid nut, the safety is better.

11.3 吨及以下单链设计，提升效率 2.5 倍；机头特殊设计，手拉力比同等产品轻 1/3。

11. 3 tons or less single chain design, improve efficiency 2.5 times, special head design, hand pull force than the same product light 1/3.

9. 起重链条试拉可以达到 4 倍破断，安全系数更高。

9. The lifting chain can be broken fourfold by a test pull, with a higher Factor of safety.

VE 手拉葫芦

VE HAND CHAIN HOIST

- 采用日本技术，罩壳高端凸字工艺
- 低合金结构钢板的采用，安全可靠，经久耐用
- 采用 80 级高强度起重链，安全系数高，使用寿命长
- 转动平稳，效率高，手拉力小
- 双棘爪、镀彩锌，压板工艺
- 产品已广泛被核电、火电输变电等采用

- Using Japanese technology, the shell high-end raised lettering process.
- Low alloy structural steel plate is safe, reliable and durable.
- It adopts 80 class high strength lifting chain with high Factor of safety and long service life.
- Smooth rotation, high efficiency, small hand tension.
- Double Pawl, colored zinc plated plate process.
- Products have been widely used in nuclear power, thermal power transmission and transformation.

移动物体　拔树　安置潜水泵　铺设管道

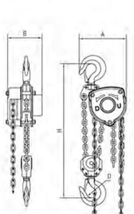

0.5T-5T

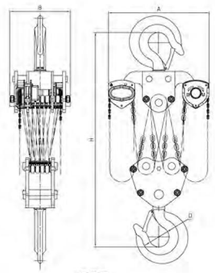

50T

型号 Model	额定载荷 Capacity (T)	起升高度 Lifting Height (M)	试验载荷 Test load (KN)	手拉力 Force of full load(N)	起重链条 Load Chain		尺寸规格 Dimensions and specifications(MM)				重量 Weighe (KG)
					行链数 No.of falls	直径 × 节距 Diameter × pitch	A	B	D	H	
VE-0.5	0.5	2.5	6.3	300	1	5×15	137	136	35	270	8.2
VE-1	1	2.5	12.5	330	1	6×18	162	142	35.5	317	10.7
VE-1.5	1.5	2.5	18.8	360	1	7.1×21	183	155	45	399	16.2
VE-2	2	3	25	390	1	8×24	183	155	45	399	18.5
VE-3	3	3	37.5	385	2	7.1×21	220	155	50	465	25.6
VE-5	5	3	63	435	2	10×30	288	183	64	618	40.2
VE-10	10	3	125	435	4	10×30	384	195	85	798	77
VE-15	15	3	188	435	6	10×30	450	201	93	870	122
VE-20	20	3	250	435×2	8	10×30	625	209	110	890	188
VE-30	30	3	375	435×2	12	10×30	691	312	110	1380	215
VE-50	50	3	625	435×2	20	10×30	840	480	170	1760	620

VD 手拉葫芦

VD HAND CHAIN HOIST

- 采用日本技术，罩壳高端凸字工艺
- 低合金结构钢板的采用，安全可靠，经久耐用
- 采用 80 级高强度起重链，安全系数高，使用寿命长
- 转动平稳，效率高，手拉力小
- 双棘爪、双导轮结构，更安全可靠
- 产品已广泛被核电、火电输变电等采用

- Adopting Japanese technology, high-end raised lettering process of the shell.
- Low alloy structural steel plate is safe, reliable and durable.
- It adopts 80 class high strength lifting chain with high Factor of safety and long service life.
- Smooth rotation, high efficiency, low hand tension.
- Double Pawl, double guide wheel structure, more safe and reliable.
- Products have been widely used in nuclear power, thermal power transmission and transformation, etc.

移动物体　拔树　安置潜水泵　铺设管道

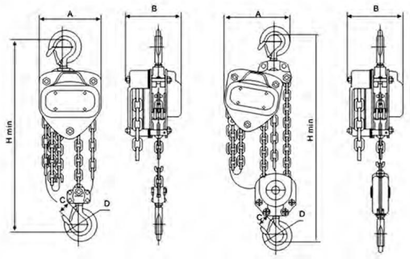

产品型号 Model		VD1T	VD1.5T	VD2T	VD3T	VD5T	VD10T
额定起重量 Rated lifting capacity(T)		1	1.5	2	3	5	10
起升高度 Lifting Height (M)		2.5	2.5	2.5	3	3	3
起重链条 Load Chain	行数 Number of rows	1	1	1	1	2	4
	规格 Specifications	6×8	7.1×21	8×24	10×30	10×30	10×30
手拉力 Force of full load		250	265	335	372	360	380
净重 / 毛重 NET weight (KG)		14.5/15	16.5/17	19.5/20.1	32/34	41.1/43.6	75.7/79.1
外形尺寸 dimensions (MM)	a	149	176	176	231	249	463
	b	153	173	173	185	185	185
	c	294	35	35	39	49	54
	d	13	51	51	49	67	75
	Hmin	352	385	385	445	615	765
起升高度增加 1M 增加的重量 An increase of 1m in lift height and weight(KG)		1.6	1.9	2.2	3.0	4.6	9.6

VN手拉葫芦

VN HAND CHAIN HOIST

VN 系列手拉葫芦是一种使用简易、携带方便的手动起重机械，通用于工厂，矿山、建筑工地、以及码头、仓库等用作安装机器、起吊货物的装卸，尤其对于露天及无电源作业，更有其重要之功用。

VN 系列手拉葫芦在结构设计与使用性能上，具有五大特点：

- 使用安全可靠，维护简便。
- 机械效率高，手链拉力小。
- 自重较轻，便于携带。
- 外形美观，尺寸较小。
- 经久耐用。

HGVN series hand hoist is a kind of easy-to-use, easy-to-carry, manual crane, which is used in factories, mines, construction sites, as well as terminals, warehouses, etc. especially for open air and non-power operation, it has its important function.

HGVN series hand chain hoist in the structure design and performance, with five major features:

- Safe and reliable use, easy maintenance.
- high mechanical efficiency, small chain tension.
- low self-weight and easy to carry.
- nice appearance and small size.
- durable.

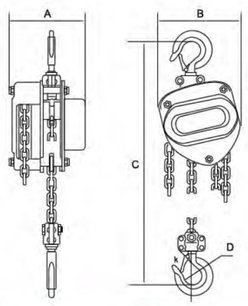

型号 Model		VN0.5	VN1	VN1.5	VN2	VN3	VN5	VN10	VN20	VN30	VN50
起重量 Weight lifting (T)		0.5	1	1.5	2	3	5	10	20	30	50
标准起重高度 Standard lifting height (M)		2.5	2.5	2.5	2.5	3	3	3	3	3	3
运行试验载荷 Operating test load(T)		0.62	1.25	1.87	2.5	3.75	6.25	12.5	25	37.5	62.5
两钩间量小距离 Measure small distance between two hooks(mm)		270	317	399	414	465	636	798	890	980	1300
满载时手链拉力 Chain pull when fully loaded(N)		231	309	320	360	340	414	414	828	450*2	450*2
起重链行数 Number of lifting chain rows		1	1	1	2	2	2	4	8	12	20
起重链条圆钢直径 Round steel diameter of lifting chain(MM)		6	6	8	8	8	10	10	10	10	10
主要尺寸 Main dimensions (mm)	A	131	140	161	161	161	186	207	215		
	B	127	158	187	187	210	253	398	650		
	C	270	317	399	414	465	636	798	890		
	Hook opening	30	34	38	41	48	52	64	85		
净重 NET weight(KG)		11.25	11.5	17.4	22.2	26.2	37.7	72	160		

VB手拉葫芦

VB HAND CHAIN HOIST

- 加厚合金钢罩壳，紧凑合理设计
- 360° 旋转吊钩，优质合金钢材质 安全卡扣防脱落设计
- G80 锰钢链条，抗磨损能力强，耐 撞击，加粗淬火设计，拉力强
- 顺滑过链轮，契合链条走向，链条 顺滑不卡链
- 喷塑工艺整体顺滑，结实耐用

- thickened alloy steel cover, compact and reasonable design
- 360° rotating hook, high-quality alloy steel material, safe clasp anti-falling design
- G80 manganese steel chain, strong wear resistance, impact resistance, rough quenching design, strong tension
- smooth through the sprocket, fit the chain trend, chain, smooth chain
- plastic spray process as a whole smooth, strong and durable

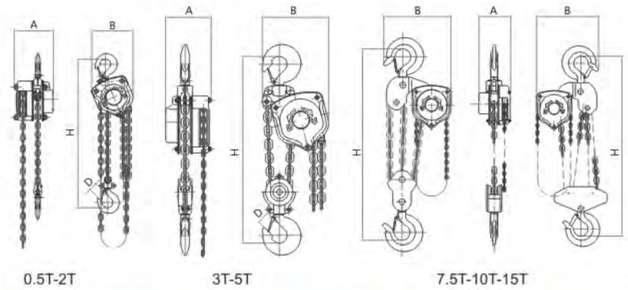

0.5T-2T　　3T-5T　　7.5T-10T-15T

型号 Model	VB1	VB2	VB3	VB5	VB10
起重量 Weight lifting（T）	1	2	3	5	10
标准起重高度 Standard lifting height （M）	2.5	2.5	3	3	3
试验载荷 test load（T）	1.25	1.25	1.25	1.25	1.25
满载时手链拉力 Chain pull when fully loaded（N）	304	314	343	383	392
起重链行数 Number of lifting chain rows	1	1	2	2	4
起重链条直径 Diameter of lifting chain（MM）	6	8	8	10	10
产品净重 NET weight （KG）	12	15	23	42	72

360° 手拉葫芦

360°-DEGREE MANUAL CHAIN HOIST

- 360° 旋转手拉链条
- 顺滑过链轮，契合链条走向，链条顺滑不卡链
- G80 锰钢链条，抗磨损能力强，耐撞击，加粗，淬火设计，拉力强
- 锰钢防脱吊钩，嵌入式卡索板
- 喷塑罩壳加厚防摔

- 360° rotating hand chain
- slide through the sprocket, fit the chain trend, chain, smooth chain without card chain
- G80 manganese steel chain, strong wear resistance, impact resistance, thickening, quenching design, strong tensile strength
- manganese steel anti-release hook, embedded cable board
- Spray plastic cover thickened anti-fall shell

型号 Model		360°-0.5	360°-1	360°-1.5	360°-2	360°-3	360°-5	360°-10	360°-20
起重量 Weight lifting(T)		0.5	1	1.5	2	3	5	10	20
标准起重高度 Standard lifting height(M)		2.5	2.5	2.5	2.5	3	3	3	3
实验载荷 Experimental load(T)		0.63	1.25	2	2.5	4	6.3	12.5	25
两钩间最小距离 Min distance between hooks(MM)		255	306	368	444	486	616	700	1000
满载时手链拉力 Chain pull when fully loaded(N)		221	304	343	314	343	383	392	392
起重链行数 Number of lifting chain rows		1	1	1	2	2	2	4	8
起重链条圆钢直径 Round steel diameter of lifting chain(MM)		6	6	8	6	8	10	10	10
主要尺寸 Main dimensions (MM)	A	125	147	183	147	183	215	360.5	585
	B	111	126	141	126	141	163	163	191
	C	24	28	34	34	38	48	64	82
	D	134	154	192	154	192	224	224	224
净重 NET weight(KG)		8	10	16	14	24	36	68	15
装箱毛重 Gross weight of packing (KG)		10	13	20	17	28	45	83	194
装箱尺寸 Packing size(CM)		28*21*17	30*24*18	34*29*20	33*25*19	38*30*20	45*35*24	62*50*28	70*46*75
起重高度每增加 1 米应增加的重量 The weight to be added for each additional metre of lifting height(KG)		1.7	1.7	2.3	2.5	3.7	5.3	9.7	19.4

VD-M 手拉葫芦

VD-M HAND CHAIN HOIST

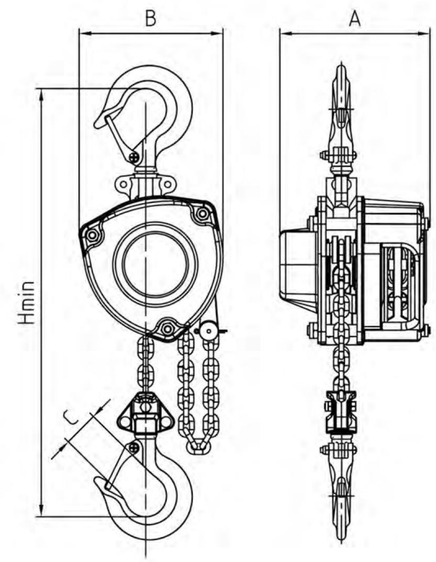

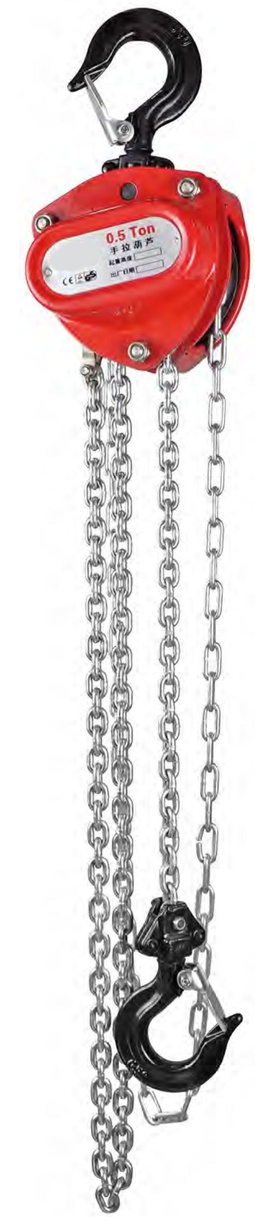

型号 Model		VDM-0.25	VDM-0.5
起重量 Weight lifting(KG)		250	500
提升高度 Raise the altitude(M)		2.5	2.5
实验载荷 Experimental load (KN)		3.15	6.3
手链规格 Bracelet specifications (MM)		Φ4×20	
起重链 Lifting chain	行数 Number of rows	1	1
	规格 Specifications	Φ4×12	Φ5×15
满载时手链拉力 Chain pull when fully loaded(N)		210	250
净重 NET weight(KG)		5.5	6.5
尺寸 size	A(MM)	125	125
	B(MM)	116	116
	C(MM)	25	30
	Hmin(MM)	285	310
包装尺寸 Packing size(MM)		220×150×150	

HSZ 手拉葫芦

HSZ HAND CHAIN HOIST

HSZ 系列手拉葫芦是一种使用广泛，携带方便的手动起重机械，可用于工业、农业建筑业、矿业等的机器安装、货物起吊、车辆装卸等，尤其适用于露天及无电源作业。

HSZ series hand hoist is a kind of widely used, easy to carry manual lifting machinery, can be used in industry, agricultural construction, mining and other machinery installation, cargo lifting, vehicle loading and unloading, etc. , especially suitable for open air and non-power operation.

移动物体　拔树　安置潜水泵　铺设管道

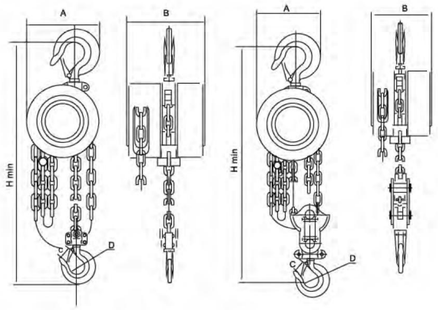

型号 Model Model		HSZ-0.5	HSZ-1	HSZ-1.5	HSZ-2	HSZ-3	HSZ-5	HSZ-10	HSZ-15	HSZ-20	HSZ-30
起重量 Weight lifting（T）		0.5	1	1.5	2	3	5	10	15	20	30
起重高度 Lifting height（M）		2.5	2.5	2.5	2.5	3	3	3	3	3	3
运行试验载荷（T）		0.62	1.25	1.87	2.5	3.75	6.25	12.5	18.7	25	37.5
两钩间最小距离 Min distance between hooks（MM）		280	320	390	410	485	600	820	920	1040	1390
满载时手链拉力 Chain pull when fully loaded（N）		210	330	390	330	390	420	450	475	450	475
起重链行数 Number of lifting chain rows		1	1	1	2	2	2	4	6	8	12
主要尺寸 Main dimensions	A	120	142	178	142	178	120	358	415	580	705
	B	107	130	147	130	147	168	168	208	200	485
吊钩开口尺寸 Size of hook opening	C	23	27	31	35	39	45	57	57	75	75
	D	26	30	34	38	42	48	65	65	85	85
净重 NET weight（KG）		7	10	15	14	24	36	75	117	164	400
装箱毛重 Gross weight of packing（KG）		10	13	20	18	30	45	89	170	214	520
装箱尺寸 Packing size（CM）		30X25X17	30X25X19	33X30X22	33X30X20	40X30X24	50X33X25	60X50X27	75X49X77	75X45X77	100X99X90
起重高度每增加一米应增加的重量 The amount of weight that should be added for each additional metre of lifting height（KG）		1.5	1.7	2.3	2.5	3.7	5.3	9.7	14.5	19.4	29

HSC 手拉葫芦

HSC HAND CHAIN HOIST

- 合金钢加厚罩壳抗磨损能力强
- 顺滑过链轮 顺滑不卡链
- 国标 G80 链条，淬火回火热处理
- 锰钢吊钩，嵌入式卡索板

- Alloy steel thickened shell wear resistance strong
- slide sprocket, smooth not stuck chain
- GB G80 chain, quenching tempering heat treatment
- manganese steel hook, embedded cable board

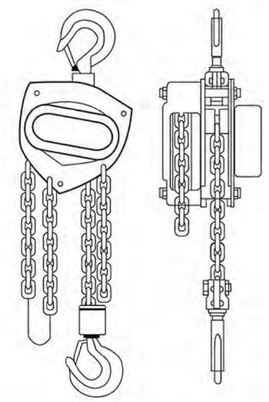

移动物体　拔树　安置潜水泵　铺设管道

型号 Model	HSC1	HSC2	HSC3	HSC5	HSC10	HSC20	HSC30
起重量 Weight lifting(T)	1	2	3	5	10	20	30
标准起重高度 Standard lifting height(M)	2.5	2.5	3	3	3	3	3
试验载荷 Test load(T)	1.5	3	4.5	7.5	12.5	25	37.5
两钩间最小距离 Min distance between hooks(MM)	306	444	486	616	700	890	980
满载时手链拉力 Chain pull when fully loaded(N)	304	314	343	383	392	392	450*2
起重链行数 Number of lifting chain rows	1	2	2	2	4	8	12
起重链条直径 Diameter of lifting chain(MM)	6	6	8	10	10	10	10

HST 手拉葫芦

HST HAND CHAIN HOIST

- 一体式加厚防撞罩壳，保护内部结构
- 顺滑导链轮，优质轴承工作效率高
- G80 锰钢链条安全系数高
- 锻打锰钢吊钩韧性高承重强

- one-piece thickened collision cover shell to protect the internal structure.
- Smooth guide sprocket, high efficiency of high quality bearing.
- G80 manganese steel chains have high Factor of safety.
- forged manganese steel hook with high toughness and load-bearing strength.

型号 Model	HST-0.5	HST-01	HST-1.5	HST-2	HST-3	HST-5	HST-10	HST-15	HST-20
起重量 Weight lifting(T)	0.5	1	1.5	2	3	5	10	15	20
标准起重高度 Standard lifting height(M)	2.5	2.5	2.5	2.5	3	3	3	3	3
试验载荷 Test load(T)	0.625	1.25	1.875	2.5	3.75	6.25	12.5	18.5	25
两钩间最小距离 Min distance between hooks(MM)	280	320	390	410	485	600	820	920	1040
满载时手链拉力 Chain pull when fully loaded(N)	210	330	390	330	390	420	450	475	450
起重链行数 Number of lifting chain rows	1	1	1	2	2	2	4	6	8
起重高度每增加一米应增加的重量 The amount of weight that should be added for each additional metre of lifting height(KG)	1.5	1.7	2.3	2.5	3.7	5.3	9.7	14.5	19.4

迷你手拉葫芦

MINI MANUAL CHAIN HOIST

- 合金钢材质，防撞罩壳
- 双滑轮双刹车设计顺畅不卡链
- 优质镀锌 G80 链条，牢固焊接点不易生锈
- 合金钢吊钩，设有安全卡扣物品不易掉落

- Alloy Steel material, anti-collision cover
- double pulley double brake design smooth chain
- high-quality galvanized G80 chain, strong welding point not easy to rust
- alloy steel hook, with safety buckle items are not easy to drop

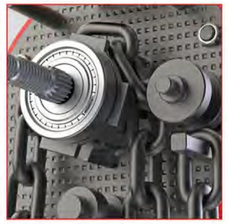

型号 Model	额定荷载 Rated load（KG）	标准起重高度 Standard lifting height（M）	实验载荷 Experimental load（KG）	满载时手链拉力 Chain pull when fully loaded（N）	起重链条直径 * 行数 Diameter of lifting chain * number of lines	主要尺寸 Main dimensions（MM）						净重 NET weight（KG）	毛重 Gross weight（KG）	包装尺寸 Packing size（长 * 宽 * 高）（CM）
						A	B	C	D	E	Hmin			
Mini-0.25	250	3	375	220	4*1	102	28	98	31	114	261	3.8	4	19*15*12
Mini-0.5	500	3	750	240	5*1	122	34	118	31	119	311	5.8	6	21*17*13
Mini-1	1000	3	1500	305	6*1	152	40	145	31	139	373	10.5	11	29*22*20
Mini-2	2000	3	3000	360	8*1	190	52	184	41	150	460	17.5	18	35*28*19
Mini-3	3000	3	4500	370	10*1	240	62	214	45	158	553	26.7	27	44*31*23
Mini-5	5000	3	7500	370	10*2	240	72	214	51	158	630	41.5	44	45*37*23
Mini-10	10000	3	15000	380	10*4	244	70	204	54	167	705	73	78	58*47*25

防爆手拉葫芦

EXPLOSION PROOF MANUAL CHAIN HOIST

- 使用过程不产生火花更安全
- H62 铜合金罩壳防爆等级高
- 铜合金导链轮，摩擦时不产生火花
- 铝青铜锻造吊钩强度高，韧性好

- the use of the process does not produce sparks safer
- H62 copper alloy shell explosion-proof grade high
- copper alloy sprocket, friction does not produce sparks
- aluminum bronze forging hook strength, good toughness

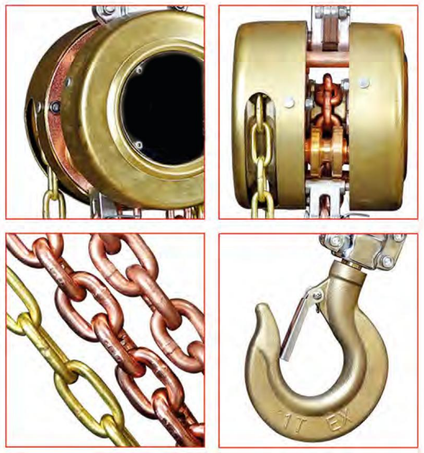

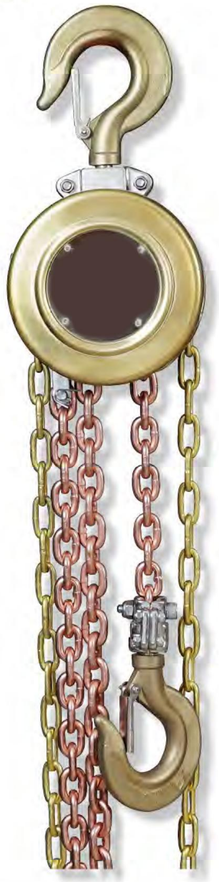

型号 Model		EXP-0.5		EXP-1		EXP-1.5		EXP-2		EXP-2.5		EXP-3		EXP-5		EXP-10		EXP-20	
起重量 Weight lifting(T)		0.5		1		1.5		2		3		3		5		10		20	
起重高度 Lifting height(M)		2.5	3	2.5	3	2.5	3	2.5	3	2.5	3	3	5	3	5	3	5	3	5
两钩间最小距离 Min distance between hooks(MM)		280		300		360		380		430		470		600		730		1000	
满载时手链拉力 Chain pull when fully loaded(N)		157		314		363		324		402		373		412		441		441	
主要尺寸 Main dimensions (MM)	A	142		142		178		142		210		178		210		358		580	
	B	126		126		142		126		165		142		165		165		195	
	C	24		24		32		34		36		38		48		64		82	
	D	142		142		178		142		210		178		210		21		210	
净重 NET weight(KG)		9.5	10.5	10	11	15	16	14	15.5	28	30	24	31.5	36	47	68	88	155	192

不锈钢手拉葫芦

STAINLESS STEEL MANUAL CHAIN HOIST

移动物体　拔树　安置潜水泵　铺设管道

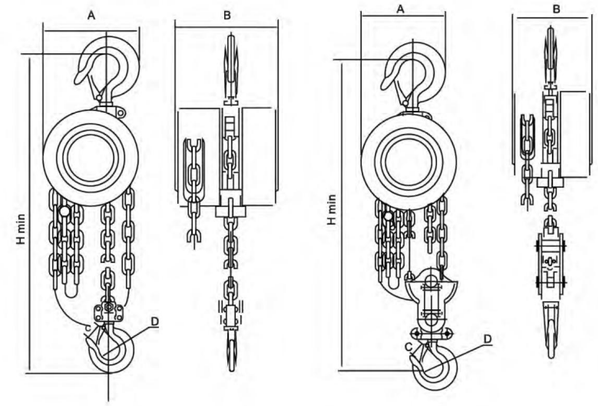

型号 Model		ST-0.5	ST-1	ST-1.5	ST-2	ST-3	ST-5	ST-10	ST-20
起重量 Weight lifting (T)		0.5	1	1.5	2	3	5	10	20
标准起重高度 Standard lifting height (M)		2.5	2.5	2.5	2.5	3	3	3	3
试验载荷 Test load(T)		0.62	1.25	1.87	2.5	3.75	6.25	12.5	25
两钩间最小距离 Min distance between hooks (MM)		270	270	368	444	486	616	700	1000
满载时手链拉力 Chain pull when fully loaded(N)		225	309	343	314	343	383	392	392
起重链行数 Number of lifting chain rows		1	1	1	2	2	2	4	8
起重链行数		6	6	8	6	8	10	10	10
主要尺寸 Main dimensions (MM)	A	120	142	178	142	178	210	358	580
	B	108	122	139	122	139	162	162	189
	C	24	28	34	34	38	48	64	82
	D	120	142	178	142	178	210	210	210
净重 NET weight(KG)		9.5	10	16	14	14	36	68	155

铝合金手拉葫芦

ALUMINUM ALLOY MANUAL CHAIN HOIST

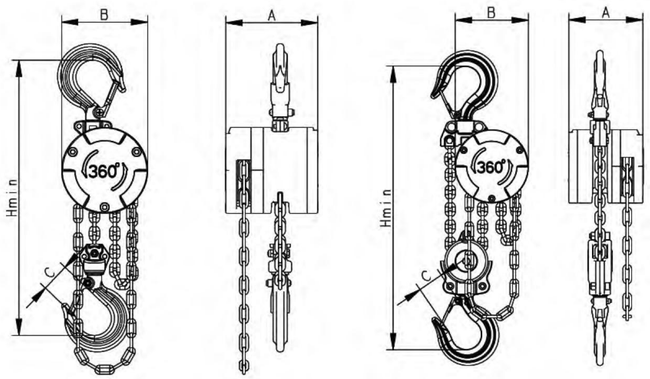

型号 Model	额定荷载 Rated load (T)	满载时手链拉力 Chain pull when fully loaded(N)	提升高度 Raise the altitude (M)	起重链行数 Number of lifting chain rows	起重链规格 Lifting chain specifications (MM)	试验载荷 Test load(KN)	尺寸 (MM)				净重 NET weight (KG)
							A	B	C	Hmin (MM)	
AL-0.25	0.25	147	2.5	1	3.2×9	3.15	89.5	84	25	240	2.5
AL-0.5	0.5	187	2.5	1	4.2×12	6.3	103	102	30	270	4.5
AL-1	1	193	3	2	4.3×12	12.5	103	102	32.3	350	8.2

锂电手拉葫芦

LITHIUM ELECTRIC HAND CHAIN HOIST

- 将电钻直接连接到驱动机构
- 将电钻连接到柔性驱动轴
- 将手动曲柄直接用于驱动机构
- 将手动曲柄手柄连接到柔性驱动轴
- 标准产品配有 5 英尺的动力轴、钻头和手柄及驱动钻机
- 请在规格表上使用 15.6V 无绳电钻
- 不要使用电动或气动冲击驱动器

- Connect the drill directly to the drive mechanism
- connect the drill directly to the flexible drive shaft
- use the manual crank directly to the drive mechanism
- connect the manual crank handle to the flexible drive shaft
- standard products come with a 5-foot power shaft, drill bit and handle, and drive drill
- use a 15.6 V cordless drill on the specification sheet
- do not use an electric or pneumatic shock driver

型号 Model	LI-12.5	LI-20	LI-38
带动力轴 Drive shaft			
额定负载 Rated load(KG)	125	181	380
起升速度 Lifting speed(cm/min)	305	183	168
直接连接 Direct connection			
额定负载 Rated load(KG)	125	181	380
起升速度 Lifting speed(cm/min)	305	183	168
标准起升 Standard Rise(CM)	305		
试验载荷 Test load(LBS)	1.25		
净空高度 Clearance height(in)	8.7	8.7	10.8
动力轴长度 Length of power shaft(CM)	152		
载重链直径 x 间距 Load chain diameter x spacing(MM)	3.1×9.3	3.1×9.3	4.3x12
动力轴重量 Power shaft weight(LBS)	9	9	12